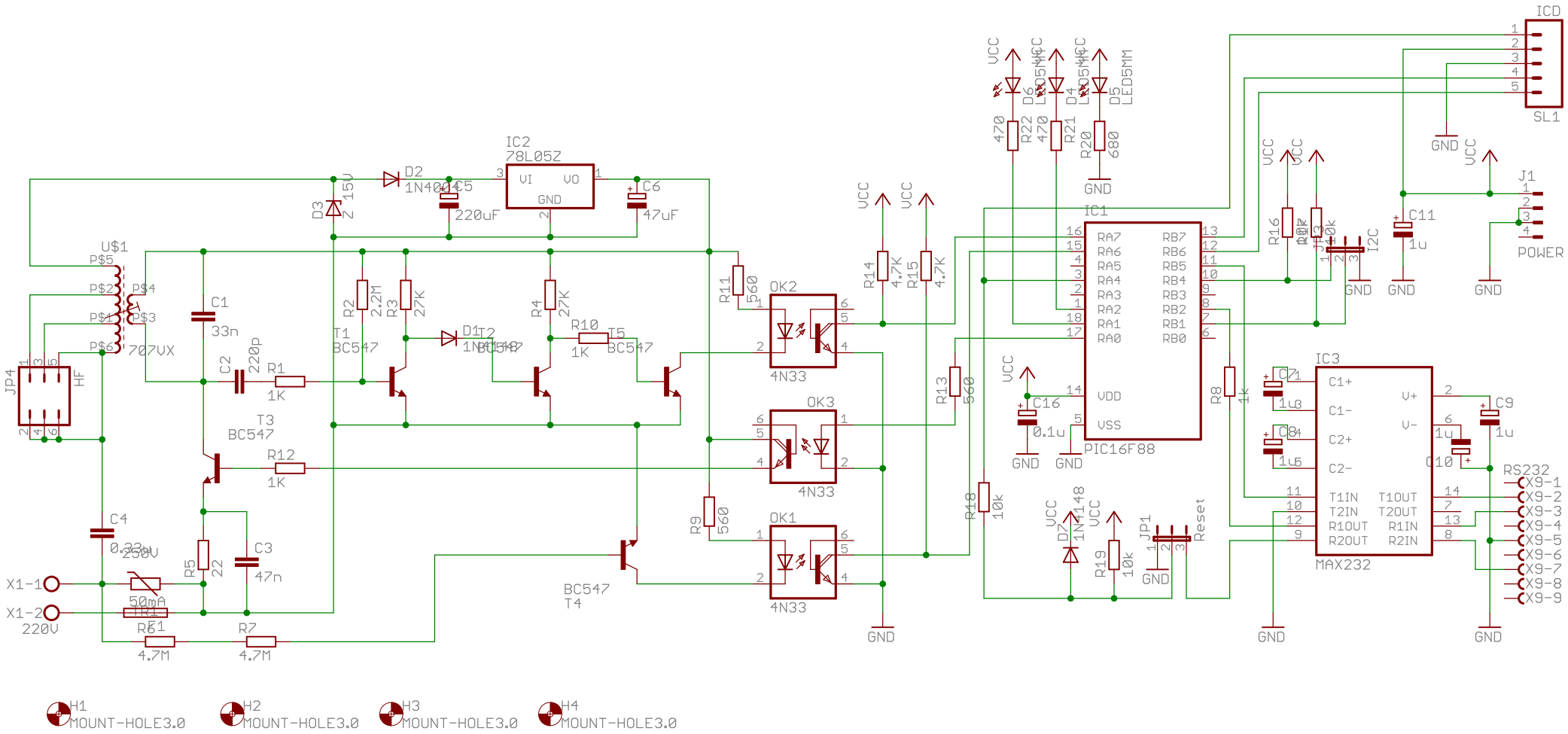
IC2
78L05Z
VI
VO
GND
D2
1N4007
C5
220uF
C6
47uF
D3
Z 15V
U$1
P$5
P$2
P$4
P$1
P$3
P$6
707VX
JP4
HF
C1
33n
C2
220p
R1
1K
T1
BC547
R2
2.2M
R3
27K
D1
1N4148
T2
BC547
R4
27K
R10
1K
T5
BC547
T3
BC547
R12
1K
C4
0.33u
250V
R5
22
C3
47n
X1-1
X1-2
220V
50mA
TR1
R6
4.7M
R7
4.7M
BC547
T4
R11
560
R9
560
OK2
OK3
OK1
4N33
4N33
4N33
R14
4.7K
R15
4.7K
R13
560
R18
10k
VCC
GND
D6
LED5MM
D4
LED5MM
D5
LED5MM
R22
470
R21
470
R20
680
IC1
PIC16F88
RA7
RA6
RA5
RA4
RA3
RA2
RA1
RA0
RB7
RB6
RB5
RB4
RB3
RB2
RB1
RB0
VDD
VSS
C16
0.1u
R8
1k
D7
1N4148
R19
10k
JP1
Reset
ICD
SL1
R16
10k
R17
10k
JP3
I2C
C11
1u
J1
POWER
IC3
MAX232
C1+
C1-
C2+
C2-
V+
V-
T1IN
T2IN
R1OUT
R2OUT
T1OUT
T2OUT
R1IN
R2IN
C7
1u
C8
1u
C9
1u
C10
1u
RS232
X9-1
X9-2
X9-3
X9-4
X9-5
X9-6
X9-7
X9-8
X9-9
H1
MOUNT-HOLE3.0
H2
MOUNT-HOLE3.0
H3
MOUNT-HOLE3.0
H4
MOUNT-HOLE3.0