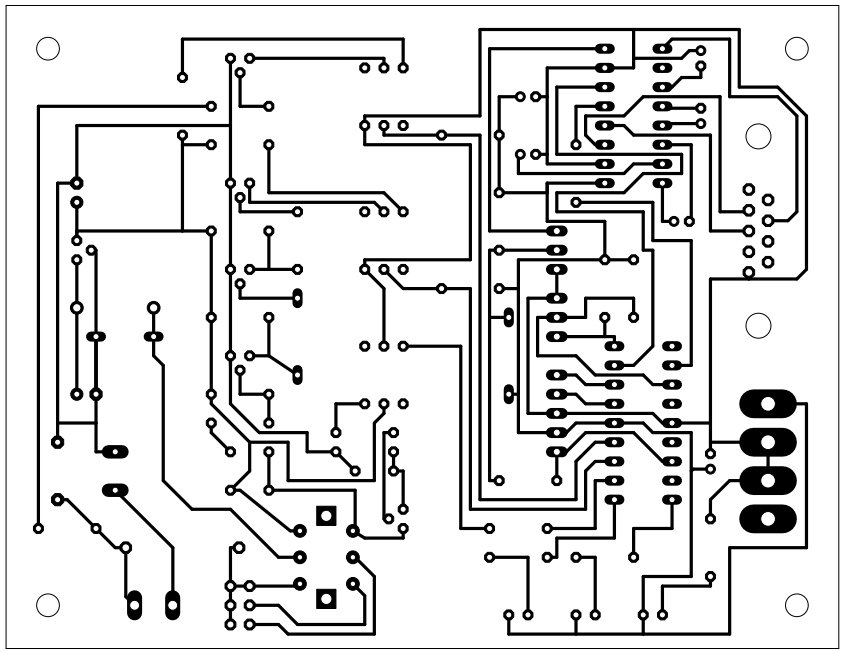

15/09/2008 08:18:29 C:\Users\Jean-Paul\Documents\eagle\cpl master\master.brd